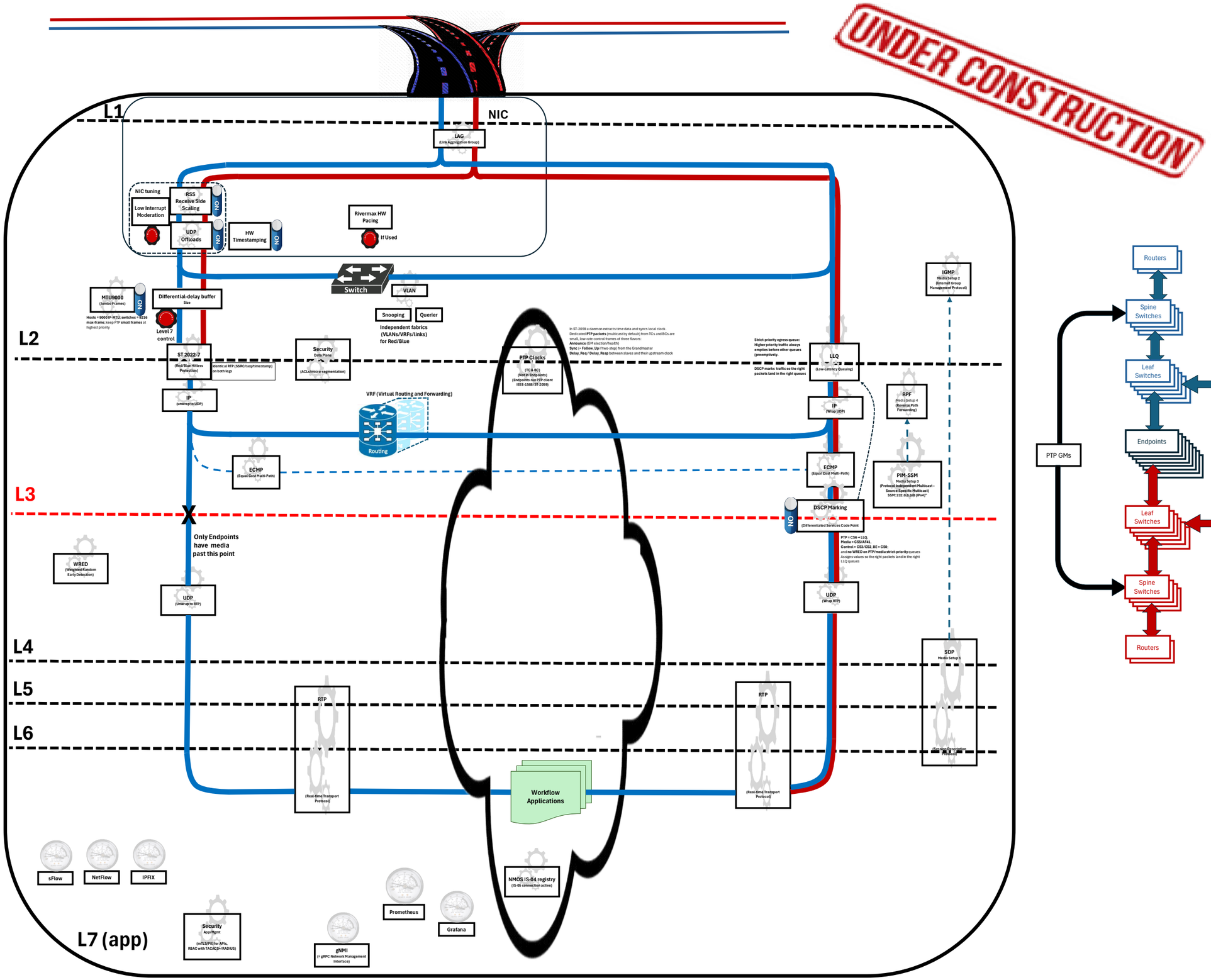
UNDER CONSTRUCTION
L1
NIC
LAG
(Link Aggregation Group)
NIC tuning
Low Interrupt Moderation
RSS Receive Side Scaling
ON
UDP Offloads
ON
HW Timestamping
ON
Rivermax HW Pacing
If Used
Switch
VLAN
MTU9000
(Jumbo Frames)
ON
Hosts = 9000 IP-MTU; switches = 9216 max-frame; keep PTP small frames at highest priority
Differential-delay buffer
Size
Level 7 control
Snooping
Querier
Independent fabrics (VLANs/VRFs/links) for Red/Blue
L2
ST 2022-7
(Red/Blue Hitless Protection)
Identical RTP (SSRC/seq/timestamp) on both legs
Security
Data Plane
(ACLs/micro-segmentation)
PTP Clocks
(TC & BC)
(Not in Endpoints)
(Endpoints run PTP client IEEE-1588/ST-2059)
In ST-2059 a daemon extracts time data and syncs local clock.
Dedicated PTP packets (multicast by default) from TCs and BCs are small, low-rate control frames of three flavors:
Announce (GM election/health)
Sync (+ Follow_Up if two-step) from the Grandmaster
Delay_Req / Delay_Resp between slaves and their upstream clock
Strict-priority egress queue: Higher-priority traffic always empties before other queues (preemptively.
DSCP marks traffic so the right packets land in the right queues
LLQ
(Low-Latency Queuing)
IGMP
Media Setup 2
(Internet Group Management Protocol)
IP
(unwrap to UDP)
VRF (Virtual Routing and Forwarding)
Routing
IP
(Wrap UDP)
RPF
Media Setup 4
(Reverse Path Forwarding)
ECMP
(Equal Cost Multi-Path)
ECMP
(Equal Cost Multi-Path)
PIM-SSM
Media Setup 3
(Protocol Independent Multicast - Source-Specific Multicast)
SSM: 232.0.0.0/8 (IPv4)"
L3
DSCP Marking
(Differentiated Services Code Point
ON
PTP = CS6 = LLQ.
Media = CS5/AF41.
Control = CS3/CS2. BE = CS0;
and no WRED on PTP/media strict-priority queues
Assigns values so the right packets land in the right LLQ queues
Only Endpoints have media past this point
WRED
(Weighted Random Early Detection)
UDP
(Unwrap to RTP)
UDP
(Wrap RTP)
L4
SDP
Media Setup 1
L5
RTP
(Real-time Transport Protocol)
RTP
(Real-time Transport Protocol)
L6
Workflow Applications
sFlow
NetFlow
IPFIX
NMOS IS-04 registry
(IS-05 connection active)
Prometheus
Grafana
Security
App/Mgmt
(mTLS/PKI for APIs, RBAC with TACACS+/RADIUS)
gNMI
(= gRPC Network Management Interface)
L7 (app)
Routers
Spine Switches
Leaf Switches
Endpoints
Servers/ Controllers
PTP GMs
Leaf Switches
Spine Switches
Routers